ПЛИТА ЭЛЕКТРИЧЕСКАЯ 6 КОНФОРОЧНАЯ 700 СЕРИИ TATRA TER.127

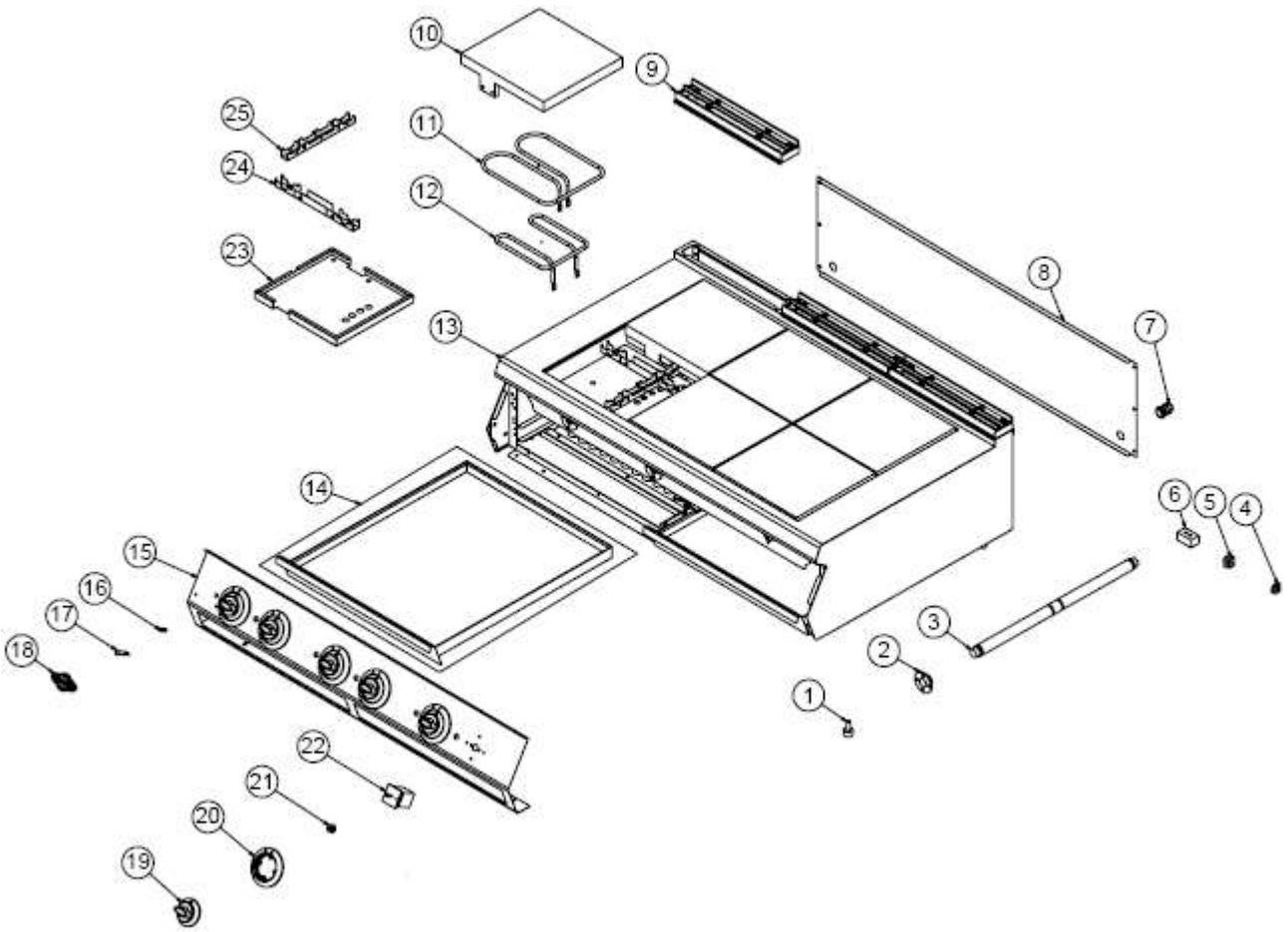

				TATRA

ПЛИТА ЭЛЕКТРИЧЕСКАЯ 6 КОНФОРОЧНАЯ 700 СЕРИИ TATRA TER.127

1	M10*35 FOOT	JP.M.AKS-AYK-PLS-002	
2	MECHANISM BUSH	YTL-KNX.PG7-KS-0031	
3	MECHANISM SHAFT Ø30 595MM	YTL-KNX.PG7-KS-0030	
4	NO:2 25 MM TERMINAL	M.ELK-KLM-RKL-4*4-SRY	
5	TERMINAL	M.ELK-KLM-PRS-005	
6	TERMINAL	M.ELK-KLM-PRS-004	
7	PG-16 CABLE FITTING	JP.M.ELK-RKR-PLS-001	
8	BACK SHEET METAL	YSC-KNX.PG7-LZ-0435	
9	40 CM X 7 CM CHIMNEY	JP.M.AKS-DKM-KZN-013	
10	RESISTANCE HOUSING	M.AKS-DKM-KZN-028	
11	380V-1800W RESISTANCE	M.ELK-RZS-BRU-IZG-016	
12	380V-1000W RESISTANCE	M.ELK-RZS-BRU-IZG-017	
13	BODY	-	
14	DRAWER	ARA-KNX.PG7-0021	
15	FRONT PANEL	YSC-KNX.PG7-LZ-1089	
16	M4 FRAME SPRING	M.YAY-PG-004	
17	SIGNAL LAMP	M.ELK-LMB-SNY-002	
18	TICKET	M.AKS-OZL-MTL-006	
19	BUTTON	M.AKS-DGM-EMP-024	
20	0-1-2-3 BUTTON BUMPER	M.AKS-DGM-EMP-042	
21	BUTTON SOCKET	JP.M.AKS-DGM-SKT-003	
22	Y90C393MK25 3*25 - SWITCH	JP.M.ELK-SLT-PKO-007	
23	INSULATION SHEET	YSC-KNX.PG7-LZ-1060	
24	RESISTANCE HOLDING SHEET-2	YSC-KNX.PG7-LZ-1062	
25	RESISTANCE HOLDING SHEET-1	YSC-KNX.PG7-LZ-1061	

TATRA