ТЕЛЕЖКА БАНКЕТНАЯ ХОЛОДИЛЬНАЯ TATRA TBT 1121 C

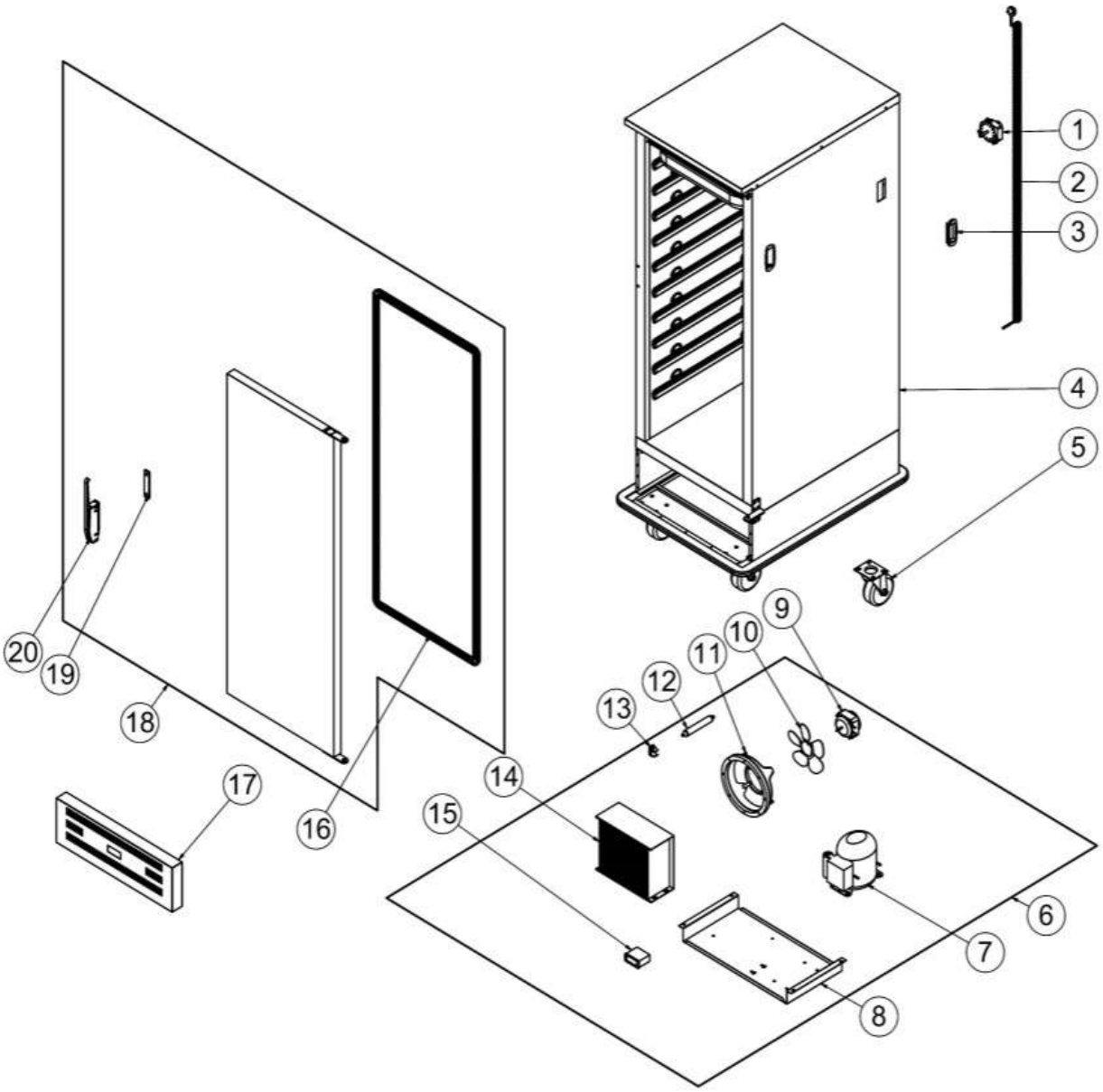

				TATRA

ТЕЛЕЖКА БАНКЕТНАЯ ХОЛОДИЛЬНАЯ TATRA TBT 1121 C

1	FAN MOTOR	ERK.M.ELK-MTR-FMT-004	
2	RECEIPT	ERK.M.ELK-PWR-PBK-004	
3	DRAWER HANDLE PLASTIC	M.ENJ-ERK-PLS-023	
4	BODY	-	
5	WHEEL WITH BRAKE	M.AKS-TKR-KFS-002	
6	COOLING GROUP	ARA-ERK.BQ1-S-0001	
7	COMPRESSOR	M.SOG-KMS-018	
8	ENGINE GROUP SHEET	YSC-ERK.BQ-PN-0062	
9	FAN MOTOR	ERK.M.ELK-MTR-FMT-002	
10	WING	M.ELK-HVL-FKN-004	
11	FAN CIRCLE PLASTIC	M.ENJ-ERK-PLS-001	
12	DRAYER	M.SOG-DRY-004	
13	HANDCUFF	M.PLS-ERK-003	
14	CONDENSER	M.SOG-KDS-004	
15	THERMOSTAT	M.ELK-EDM-DGT-043	
16	GASKET	M.CNT-ERK-012	
17	PANEL SHEET	YSC-ERK.BQ-PN-0063	
18	COVER	ARA-ERK.BQ-0024	
19	HANDLE NAIL EXTENSION SHEET	YSC-ERK.BQ-LZ-0046	
20	MAGNET LOCK	M.AKS-KLT-GNL	

TATRA