ПЕЧЬ ДЛЯ ПИЦЦЫ TATRA TPO 11

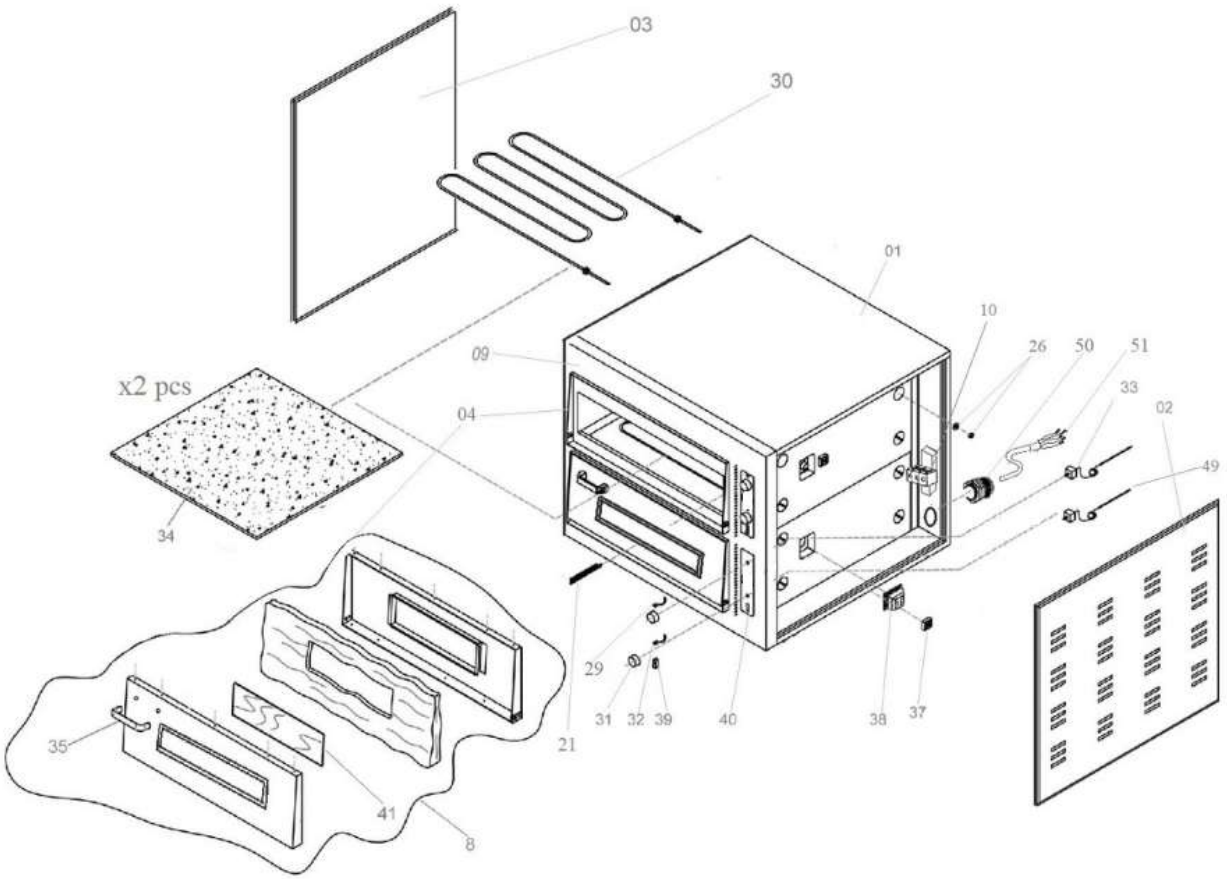

				TATRA

ПЕЧЬ ДЛЯ ПИЦЦЫ TATRA TPO 11

1	Housing	E0MINI.40D-010
2	Side Panel	E0MINI.40D-362
3	Left Cover	E0MINI.40D-008
4	Door Frame	E0MINI.40-369
8	Door complete	E0MINI.40-607
9	Panel	E0MINI.40D-889
10	Connector with 3 poles	E0730733
21	Bracket for Thermostat	E050121
26	Fixing for Heating Element	E050126
29	Green indicator Light,complete	043828
30	Heating Element (Upper and Lower)	CPMINI40-1500WHE
31	Knob, black-chromed for thermostat	E0ANOT235
32	Red indicator Light,complete	E04117R
33	Thermostat 300°C	OT300.TCSO2
34	Refracter Stone(Italian)	CPMINI40-410.410
35	Handle with connect part,small	E0BK600.MINI40
37	Connector, 2-poles, ceramic for lamp	CRMO57KLMS
38	Halogen Lamp w.cover glass, square	EO15ELCSQ
	Halogen Bulb G9	06061056
39	Lamp On/Off Switch	A040588
40	Control Panel Sticker	E015ETKT
41	Door Glass	E0668004
49	Thermostat 300°C	OT300.TCSO2
50	Strain Relief PG16	010578028
51	Electric Connection Cable without plug	E07716422

TATRA