ПЛИТА ЭЛЕКТРИЧЕСКАЯ 2 КОНФОРОЧНАЯ 700 СЕРИИ TATRA TER.47

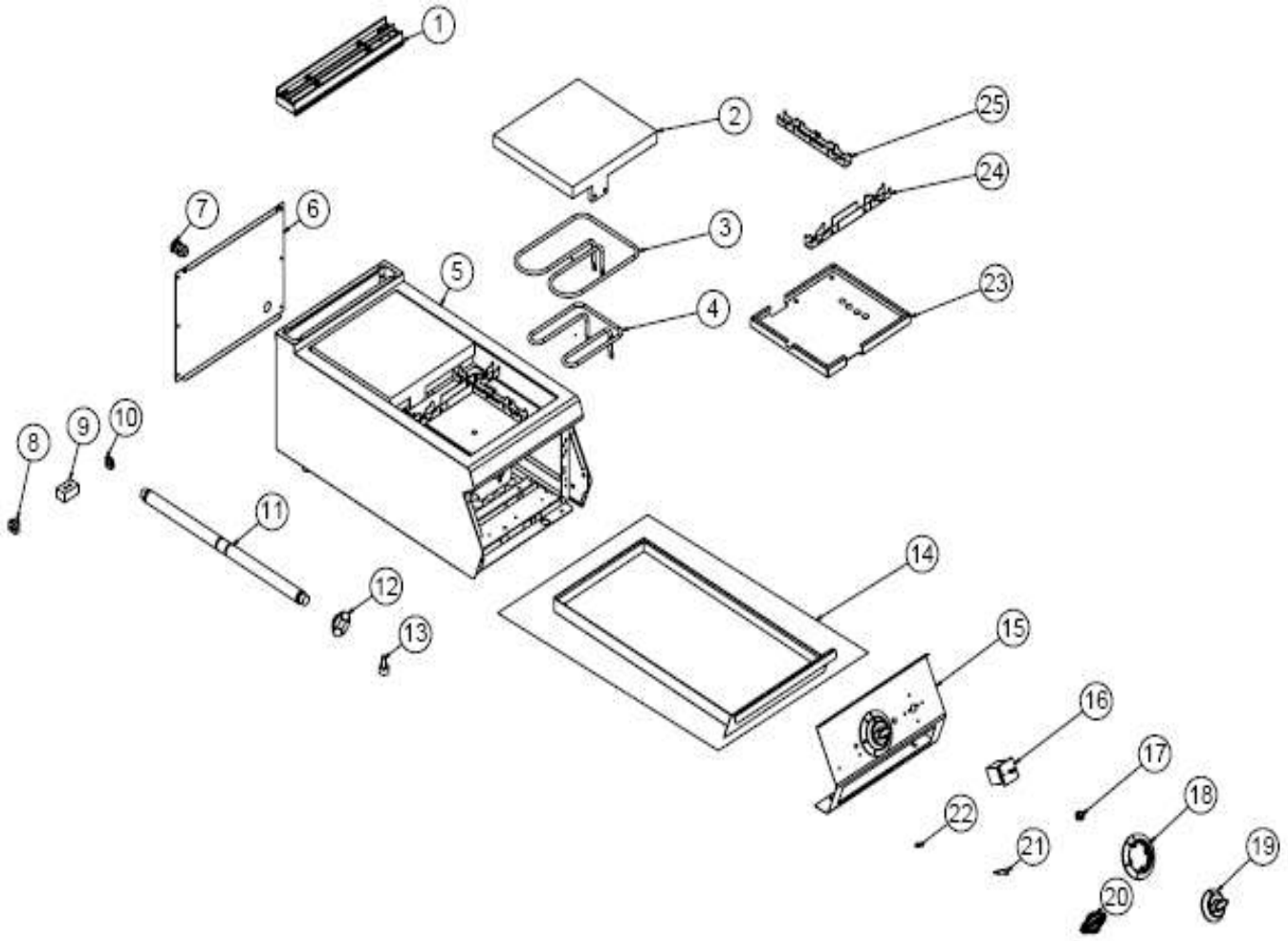

TATRA

ПЛИТА ЭЛЕКТРИЧЕСКАЯ 2 КОНФОРОЧНАЯ 700 СЕРИИ TATRA TER.47

1	40 CM X 7 CM CHIMNEY	JP.M.AKS-DKM-KZN-013	
2	RESISTANCE HOUSING	M.AKS-DKM-KZN-028	
3	380V-1800W RESISTANCE	M.ELK-RZS-BRU-IZG-016	
4	380V-1000W RESISTANCE	M.ELK-RZS-BRU-IZG-017	
5	BODY	-	
6	BACK COVER SHEET	JP.YSC-KNX.PG7-PN-0391	
7	PG-16 CABLE FITTING	JP.M.ELK-RKR-PLS-001	
8	TERMINAL	M.ELK-KLM-PRS-005	
9	TERMINAL	M.ELK-KLM-PRS-004	
10	NO:2 25 MM TERMINAL	M.ELK-KLM-RKL-4*4-SRY	
11	MECHANISM SHAFT Ø30 595MM	YTL-KNX.PG7-KS-0030	
12	MECHANISM BUSH	YTL-KNX.PG7-KS-0031	
13	M10*35 FOOT	JP.M.AKS-AYK-PLS-002	
14	DRAWER	ARA-KNX.PG7-0017	
15	FRONT PANEL	YSC-KNX.PG7-LZ-1083	
16	Y90C393MK25 3*25 - SWITCH	JP.M.ELK-SLT-PKO-007	
17	BUTTON SOCKET	JP.M.AKS-DGM-SKT-003	
18	0-1-2-3 BUTTON BUMPER	M.AKS-DGM-EMP-042	
19	BUTTON	M.AKS-DGM-EMP-024	
20	TICKET	M.AKS-OZL-MTL-006	
21	SIGNAL LAMP	M.ELK-LMB-SNY-002	
22	M4 FRAME SPRING	M.YAY-PG-004	
23	INSULATION SHEET	YSC-KNX.PG7-LZ-1060	
24	RESISTANCE HOLDING SHEET-2	YSC-KNX.PG7-LZ-1062	
25	RESISTANCE HOLDING SHEET-1	YSC-KNX.PG7-LZ-1061	

TATRA